Environmental Health Perspectives
Vol. 59, pp. 159-162, 1985

Polychlorinated Dibenzo-*p*-dioxins and Dibenzofurans in Fly Ash and Cinders Collected from Several Municipal Incinerators in Japan

by Tadaaki Wakimoto* and Ryo Tatsukawa*

Determination of polychlorinated dibenzo-*p*-dioxins (PCDDs) and polychlorinated dibenzofurans (PCDFs) in fly ash and cinders collected from nine municipal incinerators in Japan was made. The concentrations of PCDDs and PCDFs in this study were generally in the same range as those in Europe and North America. However, the rather different congener composition compared with those published already were found: higher percentages of lower chlorinated (di- and tri-) dibenzo-*p*-dioxins and dibenzofurans and no or trace levels of the octachloro compounds, O_8CDD and O_8CDF. One possible explanation for this difference may be the higher incineration temperature in Japan. The same ranges of concentrations of PCDDs and PCDFs were found in cinders as well as fly ash. The volumes of the cinders are much larger than those of fly ash and therefore the fate and impact of PCDDs and PCDFs in dump sites of these cinders should be studied.

Introduction

Since Olie et al. (*1*), in 1977, reported on the occurrence of PCDDs (polychlorinated dibenzo-*p*-dioxins) and PCDFs (polychlorinated dibenzofurans) in fly ash from municipal incinerators in the Netherlands, intensive studies have been conducted in Europe and North America (*2–11*). However, studies on the state-of-the-art of PCDDs and PCDFs from the municipal incinerators in Japan have not been published to date, except for two fly ash samples which had been sent to Eiceman et al. (*4*) for analysis.

This paper presents results on monitoring PCDD and PCDF residues in fly ash and cinders collected from municipal waste incinerators in Ehime Prefecture, Japan.

Experimental

Samples

Fly ash and cinders were sampled from nine municipal waste incinerators in seven cities in Ehime Prefecture, Japan, in 1983. The municipal incinerators are classified into three types, depending on the process of flue gas treatment: those in which the particulates and vapor in flue gases are removed by the alkaline water shower (type 1), electrostatic precipitators in cooling tower under the decreased temperature (type 2) and a combined process of above two types (type 3).

Chemical Analysis

About 100 g of fly ash or cinders samples were employed for chemical analysis. The extraction of PCDDs and PCDFs basically followed the method of Lustenhouwer et al. (*6*), in which samples were stirred in hydrochloric acid and then extracted with toluene. The toluene extract was treated with sulfuric acid and washed with deionized water. This extract was concentrated up to 200 μL and separated into two fractions by using activated Florisil (130°C, 15 hr). The first fraction eluted with a mixed solvent of dichloromethane and hexane (1:1, v/v) containes PCDDs and PCDFs. After the second cleanup through Florisil column chromatography, the final solution containing PCDDs and PCDFs was concentrated up to 500 μL. This fraction was employed for the additional gas chromatographic cleanup by using the setup shown in Figure 1. The concentrated solution above was injected into a Chromosorb column heated at 150°C. The solvent and more

*Department of Environment Conservation, Ehime University, Tarumi 3-5-7, Matsuyama 790, Japan.

volatile materials rapidly passed through the Chromosorb column and also a Florisil column of the aparatus shown in Fugure 1, and PCDDs and PCDFs were successfully trapped on the Florisil column. PCDDs and PCDFs collected in the Florisil column were eluted with dichloromethane (3 mL).

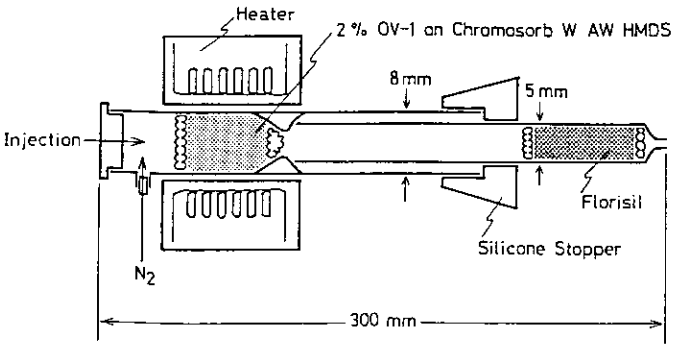

FIGURE 1. Schematic of gas chromatographic apparatus.

PCDDs and PCDFs were determined by high resolution gas chromatography medium resolution mass fragmentography. The details of GC-MS conditions were: Model: Shimadzu GC-MS 9020DF with SCAP 1123 data system; column: OV-17 (30 m length × 0.35 mm diameter); column temperature: 150°C (2 min isothermal) to 240°C, programmed at 8°C/min; EI ionization voltage: 35 eV; $M/\Delta M$: 3800 ± 100; limit of detection; 20 pg (2,3,7,8-T_4CDD and 2,3,7,8-T_4CDF). Molecular ions monitored were two highest parent ions in each isomers and congeners of di-, tri-, tetra-, penta-, hexa-, hepta-, and octachlorodibenzo-*p*-dioxins and chlorodibenzofurans. When there was disagreement of analytical values in two parent ions, another parent ion was monitored. For quantification of PCDDs and PCDFs, synthetic mixtures and pyrolyzates of PCBs were employed. Recovery of spiked PCDDs and PCDFs in fly ash for the overall analytical procedure was about 50% at the minimum.

Table 1. Concentrations (on dry weight basis) of PCDDs in fly ash and cinders from municipal incinerators.[a]

Type of incinerator	City	Waste	Congeners, ng/g							2,3,7,8-TCDD, ng/g	Total ng/g
			D_2CDD	T_3CDD	T_4CDD	P_5CDD	P_6CDD	H_7CDD	O_8CDD		
1	A-1	Fly ash	4.0	1.2	10	6.2	0.9	Tr	ND	0.2	22
		Cinders	0.5	Tr	1.7	0.4	ND	ND	ND	0.4	2.7
	B	Fly ash	32	5.1	48	3.5	0.4	0.2	ND	8.0	89
	C	Fly ash	4.0	2.6	12	1.2	0.2	3.9	0.2	0.5	24
		Cinders	120	33	90	13	0.8	1.7	0.1	1.3	260
2	D-1	Fly ash	200	82	250	310	6.7	6.7	ND	7.9	870
		Cinders	12	3.9	92	3.4	9.0	0.5	ND	2.6	120
	D-2	Fly ash	11	1.1	7.0	0.5	0.2	Tr	ND	0.1	20
	E	Cinders	1.0	0.4	3.4	1.3	0.1	0.5	ND	0.2	6.6
3	F	Fly ash	5.0	2.8	36	23	3.7	nD	ND	1.0	71
		Cinders	1.2	0.4	4.4	0.4	Tr	Tr	ND	0.2	6.4
	A-2	Fly ash	0.4	1.3	45	100	110	3.3	ND	1.6	260
		Cinders	0.1	0.3	0.2	0.2	Tr	Tr	ND	Tr	0.9
	G	Fly ash	5.2	1.7	32	51	51	410	11	2.4	560
		Cinders	1.8	0.2	26	0.2	Tr	0.6	Tr	6.7	29

[a]0.01< Tr< 0.1 ng/g; ND< 0.01 ng/g.

Table 2. Concentrations (on dry weight basis) of PCDFs in fly ash and cinders from municipal incinerators.[a]

Type of incinerator	City	Waste	Congeners, ng/g							2,3,7,8-TCDD, ng/g	Total ng/g
			D_2CDF	T_3CDF	T_4CDF	P_5CDF	H_6CDF	H_7CDF	O_8CDF		
1	A-1	Fly ash	12	0.7	3.4	3.9	0.2	0.4	ND	0.5	20
		Cinders	ND	1.1	0.1	Tr	Tr	0.6	0.9	0.4	2.7
	B	Fly ash	21	4.5	8.9	73	1.9	0.5	ND	1.4	110
	C	Fly ash	1.7	1.7	0.4	ND	Tr	0.7	0.5	0.5	4.5
		Cinders	42	14	2.3	1.1	0.2	0.7	ND	1.3	60
2	D-1	Fly ash	20	32	31	180	42	10	0.2	5.4	310
		Cinders	37	14	8.4	12	2.5	0.8	0.2	1.2	74
	D-2	Fly ash	4.0	1.8	0.9	12	0.2	Tr	ND	0.2	19
	E	Cinders	1.2	1.3	1.2	11	2.1	0.1	Tr	0.2	17
3	F	Fly ash	3.9	9.0	3.8	7.4	1.8	0.2	19	0.8	45
		Cinders	0.7	0.4	0.2	0.2	Tr	0.3	ND	ND	1.8
	A-2	Fly ash	1.8	8.1	9.9	2.4	9.9	3.2	0.4	2.6	36
		Cinders	Tr	1.3	0.3	0.1	ND	ND	Tr	Tr	1.8
	G	Fly ash	ND	6.2	1.0	24	56	11	23	0.1	120
		Cinders	1.3	1.7	0.2	0.5	0.1	0.5	Tr	Tr	4.3

[a]0.01< Tr< 0.1 ng/g; ND< 0.01 ng/g.

Results and Discussion

The results of PCDD and PCDF analysis in fly ash and cinders collected from nine municipal incinerators in Japan are shown in Tables 1–3.

PCDDs in fly ash and cinders were found to be in the ranges of 22–870 ng/g and 0.9–260 ng/g on a dry weight basis, respectively (Table 2), where fly ash contained higher concentrations of PCDDs than cinders, except those from the incinerator for city C. In most cases, the tetrchloro (T_4CDD) and pentachloro (P_5CDD) congeners were major components in PCDDs.

The concentration levels of PCDFs (Table 2) were nearly the same as those of PCDDs in both fly ash (4.5–310 ng/g on dry weight basis) and cinders (1.8–74 ng/g on dry weight basis), and found to be higher in fly ash than in cinders.

The concentration ranges of PCDDs and PCDFs in this study are generally at the same levels as those from Europe and North America (Table 4). However, detailed congener compositions of PCDDs and PCDFs in this study showed some differences from those published already: larger percentages of lower (di- and tri-) chlorinated dibenzo-*p*-dioxins and dibenzofurans and no or trace levels of octachlorodibenzo-*p*-dioxin and octachlorodibenzofuran. The former may be explained by a systemic difference in analytical method and probably a higher incineration temperature (800–900°C) in Japan. The latter also may be explained by higher incineration temperature. This explanation is supported by the fact that the results for the city G incinerator with a poor combustion efficiency and low temperature incineration showed a larger percentage of highly chlorinated dibenzo-*p*-dioxins and dibenzofurans, including octochlorodibenzo-*p*-dioxin and octachlorodibenzofuran. City C incinerator is an old one, and the cinders there are a complicated mix of cinders, unburned waste and fly ash. Therefore, the cinders in the city C incinerator showed a peculiar distribution of PCDD and PCDF congeners.

Concentrations of 2,3,7,8-TCDD and -TCDF in Japan-

Table 3. Percentages of 2,3,7,8-TCDD in total T_4CDD or PCDDs and 2,3,7,8-TCDF in total T_4CDF or PCDFs in fly ash and cinders.

Sample	Type of incinerators	City	2,3,7,8-TCDD/total T_4CDD	2,3,7,8-TCDD/PCDDs	2,3,7,8-TCDF/total T_4CDF	2,3,7,8-TCDF/PCDFs
Fly ash	1	A-1	1.6	0.7	15	2.5
		B	17	9.0	16	1.3
		C	3.8	1.9	50	4.2
	2	D-1	3.1	0.9	17	1.7
		D-2	1.4	0.5	17	0.8
	3	F	2.7	1.4	20	1.7
		A-2	3.6	0.6	26	7.3
		G	7.3	0.4	14	0.1
		mean	5.1	1.9	22	2.5
Cinders	1	A-1	20	13	25	0.9
		C	1.4	0.5	15	0.6
	2	D-1	2.8	2.1	14	1.6
		E	6.2	3.2	13	0.9
	3	F	4.7	3.3	—[a]	—[a]
		A-2	—[a]	—[a]	—[a]	—[a]
		G	26	23	—[a]	—[a]
		mean	10	7.5	17	1.0

[a]Concentrations of 2,3,7,8-TCDD or 2,3,7,8-TCDF were ND or Tr.

Table 4. Concentrations (ng/g on dry weight basis) of PCDDs and PCDFs in fly ash in several countries.

Compound	Concentrations of PCDDs and PCDFs, ng/g				
	Netherlands (*6*)	Canada (*8*)	N. America (*10*)	Japan (*4*)	Japan[a]
D_2CDD	—	—	—	—	0.4–200
T_3CDD	—	—	—	—	1.1–8.2
T_4CDD	5–110	3.2–27	2.4–85	4.8–8.5	7.0–250
P_5CDD	31–490	3.4–45	6.6–210	—	0.5–310
H_6CDD	80–1200	2.2–53	9.7–350	—	0.2–110
H_7CDD	190–900	1.1–43	5.7–184	—	Tr–410
O_8CDD	110–270	0.4–26	2.1–35	—	ND–11
D_2CDF	—	—	—	—	ND–20
T_3CDF	—	—	—	—	0.7–32
T_4CDF	13–220	—	4.4–210	—	0.4–31
P_5CDF	42–510	—	18–550	—	ND–180
H_6CDF	110–870	—	22–1100	—	Tr–56
H_7CDF	89–410	—	11–500	—	0.1–11
O_8CDF	18–26	—	0.7–24	—	ND–23

[a]Present study.

Table 5. Concentrations (on dry weight basis) of PCBs in fly ash and cinders from municipal incinerators.[a]

Type of incinerator	City	Waste	PCB congeners, ng/g							Total PCBs, ng/g	Ratio PCBs/ PCDFs
			D_2CB	T_3CB	T_4CB	P_5CB	H_6CB	H_7CB	O_8CB		
1	A-1	Fly ash	Tr	11	21	15	0.9	ND	ND	48	2.3
		Cinders	Tr	0.2	0.7	0.4	0.1	ND	ND	1.4	0.5
	B	Fly ash	Tr	25	42	130	55	ND	ND	250	2.3
	C	Fly ash	Tr	4.1	1.2	1.5	5.2	ND	ND	12	2.4
		Cinders	Tr	13	13	13	20	ND	ND	58	0.9
2	D-1	Fly ash	2.1	18	27	10	6.5	ND	ND	63	0.2
		Cinders	5.5	80	47	10	39	ND	ND	180	2.4
	D-2	Fly ash	0.9	18	22	12	29	ND	ND	82	4.3
	E	Cinders	Tr	1.5	0.9	0.3	2.6	ND	ND	5.2	0.8
3	F	Fly ash	0.9	5.3	3.5	18	1.2	ND	ND	28	0.6
		Cinders	Tr	3.7	6.9	4.5	10	ND	ND	25	14
	A-2	Fly ash	Tr	ND	5.1	3.4	12	ND	ND	20	0.5
		Cinders	Tr	0.1	0.1	0.2	ND	ND	ND	0.4	0.2
	G	Fly ash	Tr	0.1	0.5	2.4	6.8	ND	ND	9.8	0.1
		Cinders	Tr	2.5	22	48	25	ND	ND	97	23

[a]0.01< Tr< 0.1 ng/g; ND< 0.01 ng/g.

ese fly ash and cinders (Tables 1, 2 and 5) were not so different from those in Europe and North America. The highest concentrations in fly ash and cinders were 8.0 and 6.7 ng/g for 2,3,7,8-TCDD and 5.4 and 1.3 ng/g for 2,3,7,8-TCDF, respectively, both on a dry weight basis. The rather uniform ratios of 2,3,7,8-TCDF/total T_4CDFs suggest that the 2,3,7,8-TCDF formation during the incineration is determined by a specific process or processes and/or a specific source material. However, low concentrations of PCBs and low ratios of PCB/PCDFs in Japanese fly ash and cinders seem to indicate that PCBs may not be a main source of PCDFs from incineration facilities (Table 5).

Our finding on PCDDs and PCDFs in cinders is interesting and have never been published before to our knowledge. The volumes of the cinders are much larger than those of fly ash in municipal incinerators. In nine incinerators of this study the cinders amounted to 15 to 30% of the original wastes (wet). Consequently, the largest portion of PCDDs and PCDFs in incineration processes is contained in the cinders but not in fly ash. In Japan, disposal of these cinders has been primarily as landfill, and so we are concerned about the fate of PCDDs and PCDFs in the dump sites and their environmental and human impact.

REFERENCES

1. Olie, K., Vermeulen, P. L., and Hutzinger, O. Chlorodibenzo-*p*-dioxins and chlorodibenzofurans are trace components of fly ash and flue gas of some municipal incinerators in the Netherlands. Chemosphere 6: 455–459 (1977).
2. Buser, H. R., Bosshardt, H. P., and Rappe, C. Identification of polychlorinated dibenzo-*p*-dioxin isomers found in fly ash. Chemosphere 7: 165–172 (1978).
3. Buser, H. R., Bosshardt, H. P., Rappe, C., and Lindahl, R. Identification of polychlorinated dibenzofuran isomers in fly ash and PCB pyrolyses. Chemosphere 7:419–429 (1978).
4. Eiceman, G. A., Clement, R. E., and Karasek, F. W. Analysis of fly ash from municipal incinerators for trace organic compounds. Anal. Chem. 51: 2343–2350 (1979).
5. Eiceman, G. A., Viau, A. C., and Karasek, F. W. Ultrasonic extraction of polychlorinated dibenzo-*p*-dioxins and other organic compounds from fly ash from municipal incinerators. Anal. Chem. 52: 1492–1496 (1980).
6. Lustenhouwer, J. W. A., Olie, K., and Hutzinger, O. Chlorinated dibenzo-*p*-dioxins and related compounds in incinerator effluents. Chemosphere 9: 501–522 (1980).
7. Kooke, R. M. M., Lustenhouwer, J. W. A., and Hutziner, O. Extraction efficiencies of polychlorinated dibenzo-*p*-dioxins and polychlorinated dibenzofurans from fly ash. Anal. Chem. 53: 461–463 (1981).
8. Eiceman, G. A., Clement, R. E., and Karasek, F. W. Variations in concentrations of organic compounds including polychlorinated dibenzo-*p*-dioxins and polynuclear aromatic hydrocarbons in fly ash from a municipal incinerator. Anal. Chem. 53: 955–959 (1981).
9. Rghei, H. O., and Eiceman, G. A. Adsorption and thermal reactions of 1,2,3,4-tetrachlorodibenzo-*p*-dioxin on fly ash from a municipal incinerator. Chemosphere 11: 569–576 (1982).
10. Sawyer, T., Bandiera, S., Safe, S., Hutzinger, O., and Olie, K. Bioanalysis of polychlorinated dibenzofuran and dibenzo-*p*-dioxin mixtures in fly ash. Chemosphere 12: 529–536 (1983).
11. van den Berg, M., Olie, K., and Hutzinger, O. Uptake and selective retention in rats of orally administered chlorinated dioxins and dibenzofurans from fly-ash and fly- ash extract. Chemosphere 12: 537–544 (1983).