Environmental Health Perspectives
Vol. 62, pp. 101-104, 1985

Benzo(a)pyrene Diolepoxide–DNA Adducts Detected by Synchronous Fluorescence Spectrophotometry

by Kirsi Vahakangas,* Glennwood Trivers,* Marilyn Rowe,* and Curtis C. Harris*†

Using benzo(a)pyrene (BP) as a model carcinogen we are currently applying a fluorescence technique to detect the very low levels of carcinogen–DNA adducts in human populations due to environmental exposure. In synchronous fluorescence spectrophotometry for detection of BP-diol epoxide–DNA, excitation and emission wavelengths are scanned simultaneously with a fixed wavelength difference ($\Delta\lambda$) of 34 nm. Compared to conventional fluorescence methods only one peak emerges because excitation and emission peaks have to match $\Delta\lambda$ to show. Because of the quenching effect of DNA, samples are hydrolyzed by acid. After this, BP-diol epoxide (BPDE)--modified DNA gives a peak at the same wavelength and of the same fluorescence yield as BP-tetrols. When DNA from peripheral blood lymphocytes of 44 coke oven workers were analyzed, 10 had a sharp peak at 379. Among 36 coke oven workers from another factory, 4 had detectable levels of adducts. A much smaller percentage of samples was positive in a group of aluminum plant workers. We have also found BPDE–DNA adducts in DNA from pulmonary alveolar macrophages and peripheral blood lymphocytes from tobacco smokers and some of the nonsmokers.

Introduction

Because polycyclic aromatic hydrocarbons (PAH) have highly fluorescent aromatic nucleus, fluorescence has been used to study the structural features of PAH–DNA complexes (*1–4*). This has also led to the idea of biologic monitoring of PAH exposure by measuring PAH–DNA adducts in human tissues by fluorescence (*5*) (Table 1). The main difficulty is the low level of environmental exposure compared to animal experiments (*6*), leading to minute amounts of DNA adducts formed. Highly sensitive assays are thus needed.

The first important improvement to the conventional fluorescence method was the photon-counting device developed by Vigny and Duquesne (*7*). It increased the signal-to-noise ratio so that very weak fluorescence could

Table 1. Fluorescence methods for PAH–DNA adducts.

Method	PAH studied	Detection limit, PAH molecules/ nucleotides	Reference
Photoncounting fluorescence spectrophotometry	7-Bromomethyl-benz(a)anthracene	$1/2 \times 10^4$	Vigny and Duquesne (*7*)
Low temperature fluorescence spectroscopy	Benzo(a)pyrene	$1/5 \times 10^4$	Ivanovic et al. (*12*)
Low temperature synchronous fluorescence spectrophotometry	Benzo(a)pyrene	$1/2 \times 10^5$	Rahn et al. (*13*)
Fluorometric HPLC assay	Benzo(a)pyrene	$1/10^7$	Rahn et al. (*14*)
Photoncounting synchronous fluorescence spectrophotometry	Benzo(a)pyrene	$1/10^6$	Vahakangas et al. (*15*)
Synchronous fluorescence spectrophotometry	Benzo(a)pyrene	$1/10^7$	Vahakangas et al. (*16*)

*Laboratory of Human Carcinogenesis, Division of Cancer Etiology, National Cancer Institute, National Institutes of Health, Bethesda, MD 20205.

†Author to whom correspondence should be addressed.

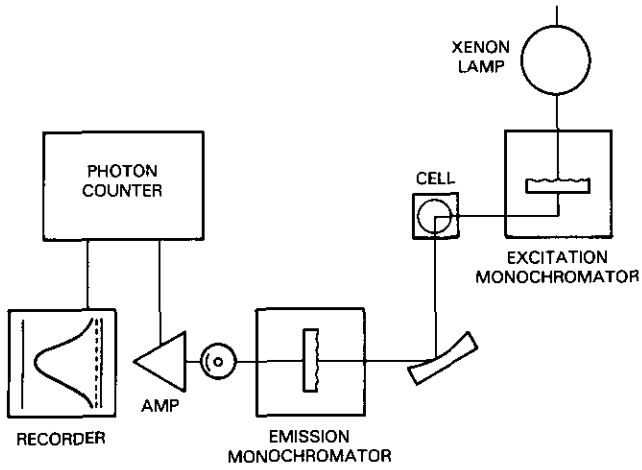

FIGURE 1. A schematic representation of a fluorescence spectrophotometer with a photoncounter.

be detected, for instance one 7-bromomethylbenz(a)anthracene molecule could be detected in 20,000 nucleotides (*7*). Another improvement was synchronous fluorescence spectrophotometry (SFS). The principle was presented by Lloyd (*8*) and developed further by Vo-Dinh (*9,10*). The main application of the method has been in analytical chemistry in differentiating between PAHs in oil mixtures (*10,11*). Conventional excitation and emission spectra are often complicated, having many peaks. By scanning excitation and emission synchronously with a fixed wavelength difference ($\Delta\lambda$), in some cases only one peak emerges. This is because a signal is seen only when $\Delta\lambda$ matches the interval between one absorption and one emission band (*9*). Low temperature can increase the fluorescence yield and has also been used in detection of carcinogen–DNA adducts; Ivanovic et al. (*12*) were able to detect one benzo(a)pyrene (BP) residue per 50,000 nucleotides with conventional fluorescence spectrophotometry after freezing the sample in 1:1 ethylene glycol at 77°K. Low temperature with synchronous scanning improves the sensitivity by the order of magnitude compared to low temperature alone (*13*). The fluorometric HPLC assay by Rahn et al. (*14*) is sensitive enough to detect BP at 1 BP residue per 10^7 nucleotides.

Results and Discussion

Synchronous scanning is possible, if the excitation and emission monochromators can be locked together and then scanned with a fixed wavelength difference ($\Delta\lambda$). Our first experiments were done with Perkin-Elmer 44B fluorescence spectrophotometer attached to an Ortec photon counter (Fig. 1) (*15*). For the synchronous scanning we used $\Delta\lambda$ 34 nm (Fig. 2). The correlation curve between the fluorescence yield at 379 nm of emission of *in vitro*-modified (BPDE)–DNA (±)-r7,t8-dihydroxy-t9,10-epoxy-7,8,9,10-tetrahydrobenzo(a)pyrene and the concentration of BP moieties in the solution was linear (Fig. 2). The minimum amount we could detect was about 200 fmole/mL. From some of the human DNA samples we could detect the same peak with $\Delta\lambda$ 34 nm as from BPDE–DNA (Fig. 3).

The main part of the studies was done with a Perkin-Elmer fluorescence spectrophotometer 650-40 with a Perkin-Elmer 3600 data station (*16*). This machine gives more accuracy, the possibility of three-dimensional scanning, and mathematical manipulation of the curves, e.g., derivative spectroscopy, and higher sensitivity. The linear correlation curve between the fluorescence intensity and concentration of BP moieties was confirmed. Because DNA quenches fluorescence of BP molecules covalently bound to it (*2,17*), we wanted to compare the fluorescence yields of (r7,t8,t9,c10-tetra-

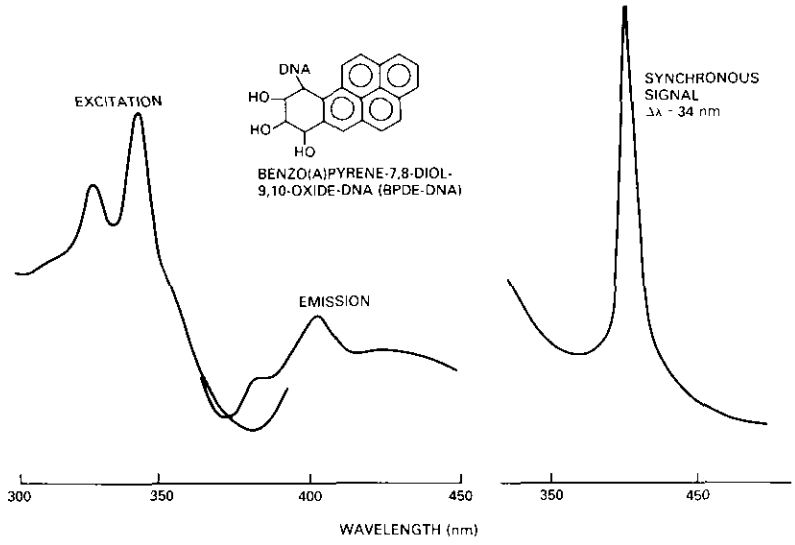

FIGURE 2. Excitation (with emission 404 nm), emission (with excitation 355 nm) and synchronous ($\Delta\lambda$ 34 nm) spectra of BPDE–DNA in Tris-EDTA buffer at room temperature. A spectral bandpass of 5 nm was used in both excitation and emission monochromators.

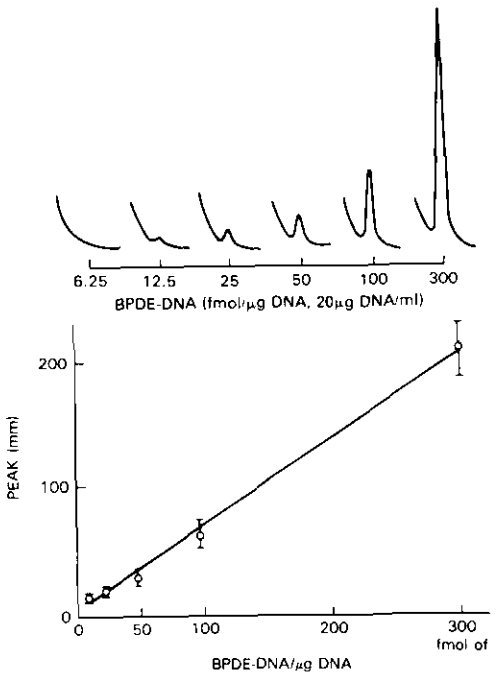

FIGURE 3. Effect of the concentration of BP moieties on the fluorescence yield. BPDE-modified DNA was mixed with unmodified calf thymus DNA to get the right concentration of BPDE in 20 μg DNA/mL. Other conditions as in Fig. 2.

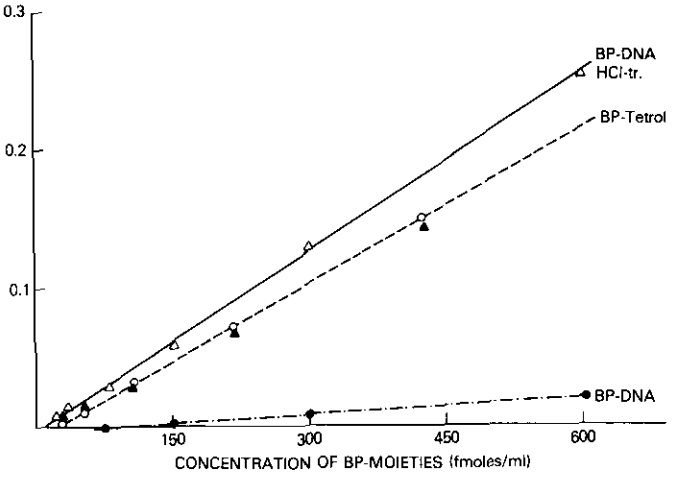

FIGURE 4. Standard curves for BPDE–DNA (BP–DNA) before and after HCl hydrolysis, and for r7,t8,t9-c10-tetrahydroxy-7,8,9,10-tetrahydrobenzo(a)pyrene. Conditions as in Fig. 2.

hydroxy-7,8,9,10-tetrahydrobenzo(a)pyrene (BP-tetrol) to that of BPDE–DNA. The differences we saw between (BP-tetro) and BPDE–DNA were close to those reported by Rahn et al. (*14*), BP-tetrol being more fluorescent than BPDE–DNA (Fig. 4). Because of this strong effect and possibly different fluorescence yields of different adducts (*18*), the quantitation seemed impossible without total hydrolysis of the BPDE–DNA after the isolation and purification of DNA. This seemed to be best gained by hydrolyzing in HCl at 90°C (*14,16*). Three hours at 90°C in 0.1 M HCl was enough to increase the fluorescence yields of BPDE–DNA to the same level with BP-tetrol (Fig. 4).

We are currently applying this fluorescence assay and enzyme immunoassays to study DNA isolated from peripheral blood lymphocytes (PBL) from coke oven workers and aluminum plant workers and also to compare DNA from alveolar macrophages and PBLs from smokers to that from nonsmokers. There are some earlier encouraging reports where immunoassays have been used (*19,20*).

In one sample of 44 coke oven workers (*21*), we found about 65% positives at 380 nm with Δ λ 34 nm by SFS. Of the 10 persons who had a sharp peak at 379 to 380 nm, either after 1 hr or 3 hr heating at 90°C in 0.1 M HCl, one was a nonsmoker, three were ex-smokers, and six were smokers. We had enough DNA from some of the coke oven workers to measure adducts by USERIA (ultrasensitive enzymatic radioimmunoassay) (*22,23*). Some of the samples positive by SFS were negative by USERIA and vice versa. Although the reasons for the discrepancies are not totally clear yet, we might speculate that they could be explained in part by the fact that USERIA with polyclonal rabbit antiserum detects BPDE–DNA, whereas BP-GUA and BP-tetrols are poorly detected by this antiserum (*23*), and some amount of hydrolysis is already caused by DNA isolation and more by storage. By both of the methods smokers had the highest mean adduct levels. In another sample of 36 coke oven workers, four had a sharp peak at 379 nm after HCl treatment (unpublished results). Of 30 aluminum plant workers only one of the smokers was positive (*16*). Pulmonary alveolar macrophage and peripheral blood lymphocyte DNAs from both some of

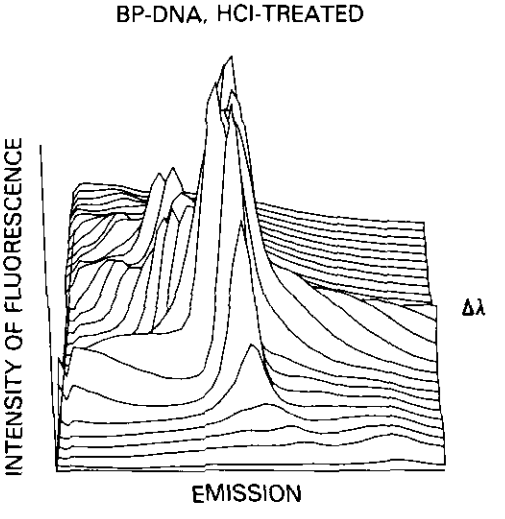

FIGURE 5. Three-dimensional synchronous spectrum of BPDE–DNA (BP–DNA). For the first scan Δλ of 10 nm was used. Total of 28 scans with an increment of 4 nm.

the healthy smokers and nonsmokers show a peak implying BPDE–DNA adducts (unpublished results).

Conclusion and Perspectives

We are able to detect less than 1 BP moiety per 10^7 nucleotides in *in vitro* modified BPDE–DNA by fluorescence using synchronous scanning with $\Delta\lambda$ 34 nm after hydrolyzing the DNA in 0.1 M HCl at 90°C. According to preliminary results, the method should be usable for biologic monitoring in exposed humans, but verification of the quantitation and specificity of the method need *in vivo* animal experiments.

Further developments of the approach include derivative spectroscopy, which is a routine, powerful, and useful technique to aid in resolution of complex spectra (*24*). An interesting method is three-dimensional scanning (Fig. 5) by which the best $\Delta\lambda$ for new adducts/compounds might be found. A contour map of the three-dimensional figure makes it possible to find sites of peaks with great accuracy and might provide a kind of "finger print" in complicated cases (Harris and LaVeck, personal communication).

The technical assistance of Gerald LaVeck, Debbie Culbreth, and Carolyn Gray is gratefully acknowledged. We thank Dr. William Wright of California, Dr. Aage Haugen of Norway and Dr. Henry Yeager of Washington DC for collaboration in the projects. Anti-benzo(a)pyrenediolepoxide and benzo(a)pyrene tetrol were provided through the National Cancer Institute Carcinogen Repository.

REFERENCES

1. Daudel, P., Duquesne, M., Vigny, P., Grover, P. L., and Sims, P. Fluorescence spectral evidence that benzo(a)pyrene-DNA products in mouse skin arise from diol-epoxides. FEBS Letters 57: 250–253 (1975).
2. Dock, L., Undeman, O., Graslund, A., and Jernstrom, B. Fluorescence study of DNA-complexes formed after metabolic activation of benzo(a)pyrene derivatives. Biochem. Biophys. Res. Commun. 85: 1275–1282 (1978).
3. Vigny, P., Spiro, M., Hodgson, R. M., Grover, P. L., and Sims, P. Fluorescence spectral studies on the metabolic activation of chrysene by hamster embryo cells. Carcinogenesis 3: 1491–1493 (1982).
4. Gagliano, A. G., Geacintov, N. E., Ibanez, V., Harvey, R. G., and Lee, H. M. Application of fluorescence and linear dichroism techniques to the characterization of the covalent adducts derived from interaction of (±)-trans-9,10-dihydroxy-anti-11,12-epoxy-9,10,11,12-tetrahydrobenzo[e]pyrene with DNA. Carcinogenesis 3: 969–976 (1982).
5. Vigny, P., and Duquesne, M. Fluorimetric detection of DNA-carcinogens complexes. In: Chemical Carcinogens and DNA, Vol. I (P. L. Grover, Ed.), CRC Press, New York, 1979, pp. 85–110.
6. IARC. Polycyclic Aromatic Hydrocarbons (Monographs, Vol. 32), International Agency for Research on Cancer, Lyon, 1984.
7. Vigny, P., and Duquesne, M. A spectrophotofluorometer for measuring very weak fluorescences from biological molecules. Photochem. Photobiol. 20: 15–25 (1974).
8. Lloyd, J. B. The nature and evidential value of the luminescence of automobile engine oils and related materials. I. Synchronous excitation of fluorescence emission. J. Forensic Sci. Soc. 11: 83–94 (1971).
9. Vo-Dinh, T. Multicomponent analysis by synchronous luminescence spectrometry. Anal. Chem. 50: 396–401 (1978).
10. Vo-Dinh, T. Synchronous luminescence spectroscopy: methodology and applicability. Appl. Spectrosc. 36: 576–581 (1982).
11. Vo-Dinh, T., and Martinez, P. R. Direct determination of selected polynuclear aromatic hydrocarbons in a coal liquefaction product by synchronous luminescence techniques. Anal. Chim. Acta 125: 13–19 (1981).
12. Ivanovic, V., Geacintov, N. E., and Weinstein, I. B. Cellular binding of benzo(a)pyrene to DNA characterized by low temperature fluorescence. Biochem. Biophys. Res. Commun. 70: 1172–1179 (1976).
13. Rahn, R. O., Chang, S. S., Holland, J. M., Stephens, T. J., and Smith, L. H. Binding of benzo(a)pyrene to epidermal DNA and RNA as detected by synchronous luminescence spectrometry at 77 K. J. Biochem. Biophys. Methods 3: 285–291 (1980).
14. Rahn, R. O., Chang, S. S., Holland, J. M., and Shugart, L. R. A fluorometric HPCL assay for quantitating the binding of benzo(a)pyrene metabolites to DNA. Biochem. Biophys. Res. Commun. 109: 262–268 (1982).
15. Vahakangas, K., Shamsuddin, A., Wright, W., Yeager, H., and Harris, C. C. Synchronous fluorescence spectrophotometry to assess benzo(a)pyrene-DNA adducts in human cells. International Seminar on Methods of Monitoring Human Exposure to Carcinogenic and Mutagenic Agents (poster session), Espoo, Finland, 1983.
16. Vahakangas, K., Haugen, A., and Harris, C. C. An applied synchronous fluorescence spectrophotometric assay to study benzo(a)pyrene-diolepoxide-DNA adducts. Carcinogenesis, in press.
17. Yang, N.-C. C., Ng, L.-K., Neoh, S. G., and Leonov, D. A spectrofluorimetric investigation of calf thymus DNA modified by BP diolepoxide and 1-pyrenyloxirane. Biochem. Biophys. Res. Commun. 82: 929–934 (1978).
18. Kinoshita, T., Lee, H. M., Harvey, R. G., and Jeffrey, A. M. Structures of covalent adducts derived from the reactions of 9,10-epoxides of 7,8,9,10-tetrahydrobenzo(a)pyrene and 9,10,11,12-tetrahydrobenzo(e)pyrene with DNA. Carcinogenesis 3: 225–260 (1982).
19. Perera, F. P., Poirier, M. C., Yuspa, S. H., Nakayama, J., Jaretzki, A., Curnen, M. M., Knowles, D. M., and Weinstein, I. B. A pilot project in molecular cancer epidemiology: determination of benzo(a)pyrene-DNA adducts in animal and human tissues by immunoassays. Carcinogenesis 3: 1405–1410 (1982).
20. Shamsuddin, A. K. M., Sinopoli, N. T., Hemminki, K., Boesch, R. R., and Harris, C. C. Detection of benzo(a)pyrene-DNA adducts in human white blood cells, Cancer. 45: 66–68 (1985).
21. Harris, C. C., Vahakangas, K., Newman, M., Trivers, G., Shamsuddin, A., Sinopoli, N., Mann, D. L., and Wright, W. E. Detection of putative benzo(a)pyrene diol epoxide-DNA adducts in peripheral blood lymphocytes and antibodies to the adducts in sera from coke oven workers. Proc. Natl. Acad. Sci. (U.S.), in press.
22. Hsu, I.-C., Poirier, M. C., Yuspa, S. H., Grunberger, D., Weinstein, I. B., Yolken, R. H., and Harris, C. C. Measurement of benzo(a)pyrene-DNA adducts by enzyme immunoassays and radioimmunoassay. Cancer Res. 41: 1091–1095 (1981).
23. Harris, C. C., Yolken, R. H., and Hsu, I.-C. Enzyme immunoassays: applications in cancer research. In: Methods in Cancer Research, Vol. 20. Academic Press, New York, 1982, pp. 213–243.
24. Butler, W. L. Fourth derivative spectra. In: Methods in Enzymology, Vol. 56. Academic Press, New York, 1979, pp. 501–515.