Environmental Health Perspectives
Vol. 33, pp. 45-55, 1979

Lipid Absorption and Metabolism

by A. Kuksis*, N. A. Shaikh*, and A. G. D. Hoffman*

Metabolic processes occurring within the mucosal cell are critical in determining results of interactions between environmental agents and the alimentary tract. The absorption, metabolism, and transport of lipids affects most those agents which are lipid soluble. The understanding of the process involved in lipid absorption and transport is therefore important for both appreciation of the mechanism of uptake of these toxins and for an effective interference with it. Most of the detailed mechanisms of lipid absorption and transport have been proposed from *in vitro* studies with soluble cell-free systems. The present review integrates these results with recent *in vivo* and *in vitro* findings with intact animal tissues and isolated mucosal cells. While there is much general agreement occasional startling differences are also observed, which may have a bearing on the mechanism of normal fat absorption and on the understanding of the transport of the fat-soluble toxins across the mucosal villus cell.

Introduction

The absorption and metabolism of lipids by the intestine is of great interest to environmental toxicology because the intestinal mucosa provides a large and intimate contact area between animal tissues and environment and because many natural and industrial toxins are lipid soluble and are carried into the body along with dietary fat (*1, 2*). In this connection of special concern is the passive nature of the absorption process, the transmembrane transport of partially degraded lipid esters in the form of surface active materials, and the rapid resynthesis and clearance of dietary fat from the absorbing cells in the form of incompletely defined structures, which can accommodate a variety of foreign substances.

The subject of lipid absorption and metabolism has been extensively reviewed (*3-11*), including the physical chemistry of the process (*8, 9*) and possible metabolic control points (*5, 6, 10*). The present discussion briefly summarizes the current understanding of the field and integrates it with some new *in vivo* and *in vitro* data gathered with intact cells, which support some of the earlier concepts and dispute others.

*Banting and Best Department of Medical Research, University of Toronto, Toronto, Canada.

Overall Process

Figure 1 summarizes the major metabolic transformations of the dietary lipids based on both *in vitro* and *in vivo* results. This schematic depicts the entry of dietary fat into the villus cell in the form of free fatty acids, 2-monoacylglycerols, and free glycerol, but 1(3)-monoacylglycerols and lysophosphatidylcholine are also known to enter the cell intact. This entry is facilitated by bile salts, which, however, do not play any further role in the fat absorption process. The long-chain fatty acids are believed to enter a common pool of fatty acyl CoA esters, which are utilized for both neutral and phosphoglycerol acylation, but this may need correction. Figure 1 also shows a single pool of diacylglycerols, and this requires qualification. Clearly, the diacylglycerols arising from the phosphatidic acid pathway are all of the sn-1,2-type and they proceed to the triacylglycerols via acylation of the sn-3-position. These diacylglycerols also give rise to the glycerophospholipids. The latter pathway is responsible for the entire resynthesis of dietary fat in the absence of 2-mono-acylglycerols, e.g., free fatty acid or simple fatty ester feeding. The sn-1,2-diacylglycerols may also be formed by acylation of sn-1-monoacylglycerol phosphate arising via the monoacylglycerol kinase (*12*), which, however, does not phosphorylate the diacylglycerols. In micro-

somal preparations 2-monoacylglycerols give rise to sn-1,2-diacylglycerols by direct acylation, but in intact cells both sn-1,2- and sn-2,3-diacylglycerols are formed in nearly equal amounts. Potential inhibitory effects of monoacylglycerols upon the activity of the phosphatidic acid pathway have been suggested, but they may have no metabolic significance. A single pool is also being shown for the triacylglycerols, although the acylation of diacylglycerols may take place at different subcellular sites. There is no evidence, however, for a subcellular segregation of the triacylglycerol pools. Thus triacylglycerols arising from both the phosphatidic acid and the 2-monoacylglycerol pathways are incorporated together into the chylomicrons along with free cholesterol, phosphatidylcholine, and lipoproteins, as the final step in the absorption of the dietary fat. The chylomicrons contain definite ratios of triacylglycerol and phosphatidylcholine, depending on the particle size. It has been shown that the amounts of phosphatidylcholine and free cholesterol recovered from the lymph chylomicrons of dogs and rats is just sufficient to form a monolayer coating a sphere of triacylglycerol-core particles (*13, 14*). Although there is a general agreement on the structure of the chylomicrons, there would appear to persist some reluctance to recognize the essentiality of all the chylomicron components for both the packaging of the triacylglycerols and for the release of the particles from the mucosal cells.

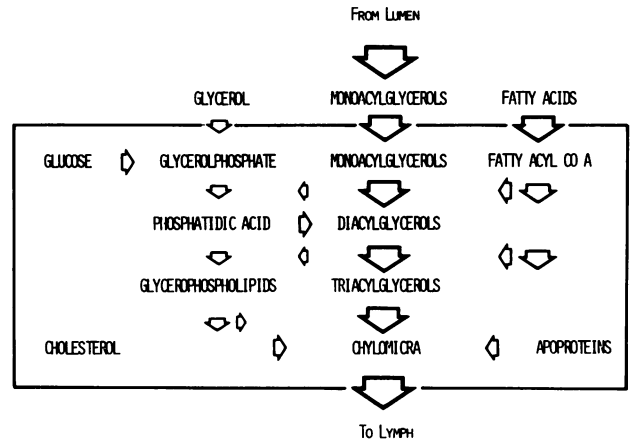

FIGURE 1. Simplified schematic of transformation of main products of luminal hydrolysis of dietary fat during absorption and resynthesis into chylomicrons by an intestinal villus cell.

Enantiomeric Nature of Diacylglycerol Intermediates

Fasting intestinal mucosa contains exclusively sn-1,2-diacylglycerols (*15*). This finding can be rationalized on the basis of the known products of the phosphatidic acid pathway and/or a back-reaction from the CDP-choline pathway of phosphatidylcholine biosynthesis (*16*). The latter possibility is likely in view of the high content of the polyunsaturated fatty acids in the diacylglycerols of the fasting mucosa. The diacylglycerols originating from free fatty acid feeding are also of the sn-1,2-type, and clearly the products of phosphatidic acid synthesis (*15*).

The reacylation of 2-monoacylglycerols by the intestinal mucosa yields two products. Cell-free systems from intestine generate sn-1,2-diacylglycerols by a stereospecific acylation of the 2-monoacylglycerols (*17, 18*). In contrast, studies with everted sacs of rat intestinal mucosa have shown (*19, 20*) that both sn-1,2- and sn-2,3-diacylglycerols are major products of the acylation of 2-monoacylglycerols. Figure 2 shows a schematic of these transformations. Stereospecific analyses of the X-1,2-diacylglycerols from glycerol-labeled 2-monoacylglycerols showed that the sn-1,2-isomers (45-55%) were slightly in excess of the sn-2,3-isomers (34-45%), with the X-1,3-diacyglycerols accounting for the rest (5-10%) of the radioactivity (*20*). During triacylglycerol feeding both sn-1,2- and sn-2,3-diacylglycerols were recovered in significant amounts from the intestinal mucosal scrapings (*15*). The composition of the sn-2,3-diacylgylcerols corresponded to that with the exogenous fatty acids but the sn-1,2-diacylglycerols clearly contained both exogenous and endogenous fatty acids. Comparable results were obtained with isolated mucosal cells (*21*). Stereospecific analysis of the diacylglycerols formed from 2-monoacylglycerols and free fatty acids showed that sn-1,2-diacylglycerols (62-70%) were the major and the sn-2,3-diacyglycerols (30-38%) the minor intermediates. However, the proportion of the contribution of the phosphatidic acid pathway to the generation of the sn-1,2-isomers was not determined in the latter instance. The probability that the triacylglycerol resynthesis by the monoacylglycerol pathway in intact cells proceeds via both enantiomers of the intermediate diacylglycerols finds indirect confirmation in the optical rotatory dispersion studies of Akesson et al. (*22*). With synthetic triacylglycerol feeding, chyle triacylglycerols were found to be essentially racemic. Most of the triacylglycerol was formed from 2-monoacylglycerols, but the nature of the intermediate diacylglycerols was not established. If the triacylglycerol resynthesis had taken place exclusively via the sn-1,2-diacylglycerol intermediates, optically active products should have been

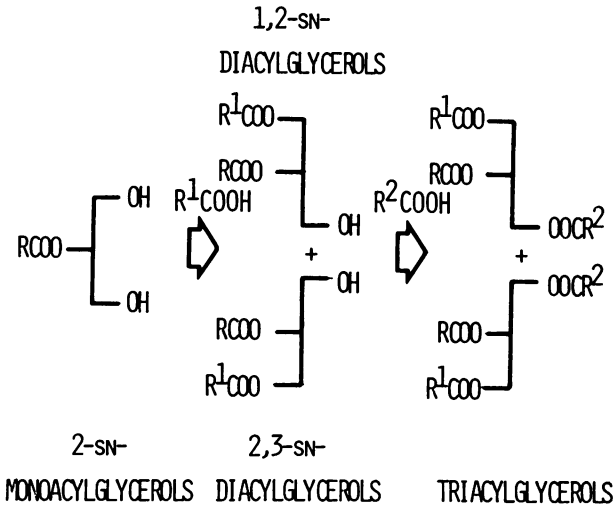

FIGURE 2. Overall transformation of 2-monoacylglycerols into triacylglycerols by intact intestinal villus cells including the intermediate formation of *rac*-1,2-diacylglycerols.

detected. In connection with the stereochemical course of the triacylglycerol resynthesis and clearance by the intestinal mucosa may be mentioned the apparent stereospecificity of digestion and absorption of rac-1,2-di-O-oleoyl-3-S-oleoyl-3-thioglycerol (23). The proportions of triacyl-1-thio-sn-glycerol/triacyl-3-thio-sn-glycerol were 63/37 and 78/22 in two experiments. The finding is consistent with a preferential utilization of 2-acyl-1-thio-sn-glycerol versus 2-acyl-3-thio-sn-glycerol. If position sn-1 was acylated first, as claimed by Johnston et al. (*17*), the difference might reflect the different functional groups in this position. A differential utilization of the two enantiomers of thioglycerols was also considered.

This apparent discrepancy between the *in vivo* and *in vitro* acylation of 2-monoacylglycerols can be reconciled if it is assumed that the monoacylglycerol sn-3-acyltransferase has been lost or inactivated during the preparation of the microsomes or homogenates of the intestinal mucosa (*19*). This possibility is supported by the observation that not only are not the sn-2,3-diacylglycerols formed, but that there is essentially no acylation of the sn-1,2-diacylglycerols to the triacylglycerols. Diacylglycerols are the sole or at least the major products of 2-monoacylglycerol acylation in cell free systems prepared from rat intestinal mucosa (*17, 18*). In contrast, diacylglycerols make up only a minor proportion of the total product of acylglycerol resynthesis in intact cells, with the triacylglycerols accounting for over 90% of the total (*21, 24, 25*). The possibility of loss of a general sn-3-acyltransferase, however, appears unlikely in view of experiments with added diacylglycerols. Enantiomeric diacylglycerols added to microsomes of intestinal mucosa are poorly acylated to triacylglycerols, but the sn-1,2-isomers are esterified more readily than the sn-2,3-isomers (*26*). Figure 3 shows a schematic of the direct transformation of both sn-1,2- and sn-2,3-diacylglycerols into triacylglycerols. The diacylglycerol acyltransferase, if a single enzyme, showed a definite preference (4-fold) for the acylation of the sn-1,2-isomers. It is therefore necessary to assume that the sn-3-monoacylglycerol acyltransferase was preferentially lost during the preparation of the cell free systems. An alternate possibility is the stereospecific acylation of the 2-monoacylglycerols via the sn-1,2-isomers at low levels of substrate concentration (cell-free systems) and a racemic reesterification of 2-monoacrlglycerols and racemic diacylglycerols at high substrate concentrations (intact cells, mucosal scrapings, and everted sacs of intestinal mucosa, and intact animals).

We have recently developed a new method of stereospecific analysis of enantiomeric diacylglycerols (*27*). It is based on the synthesis of *rac*-phosphatidylcholines and a stereospecific stepwise release of the sn-1,2- and sn-2,3-diacylglycerols by phospholipase c. This technique allows an easy identification of the molecular species of diacylglycerols in each enantiomer class as well as a subtraction of enantiomer classes to identify separate contributions as the monoacylglycerol and phosphatidic acid pathways.

Segregation of Diacylglycerol Pools

Figure 3 also indicates that added sn-1,2-diacylglycerols are converted into both triacylglycerols and phosphatidylchoines at about the same rate. The sn-2,3-diacylglycerols are converted only into

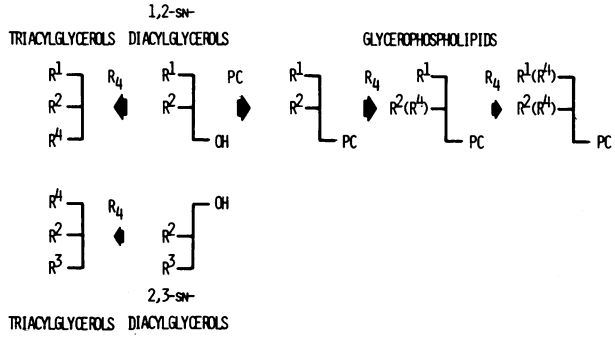

FIGURE 3. Utilization of added *rac*-1,2-diacylglycerols by microsomes of rat intestinal villus cells. $R_1 - R_4$, different fatty acids attached to glycerol backbone. PC, phosphorylcholine.

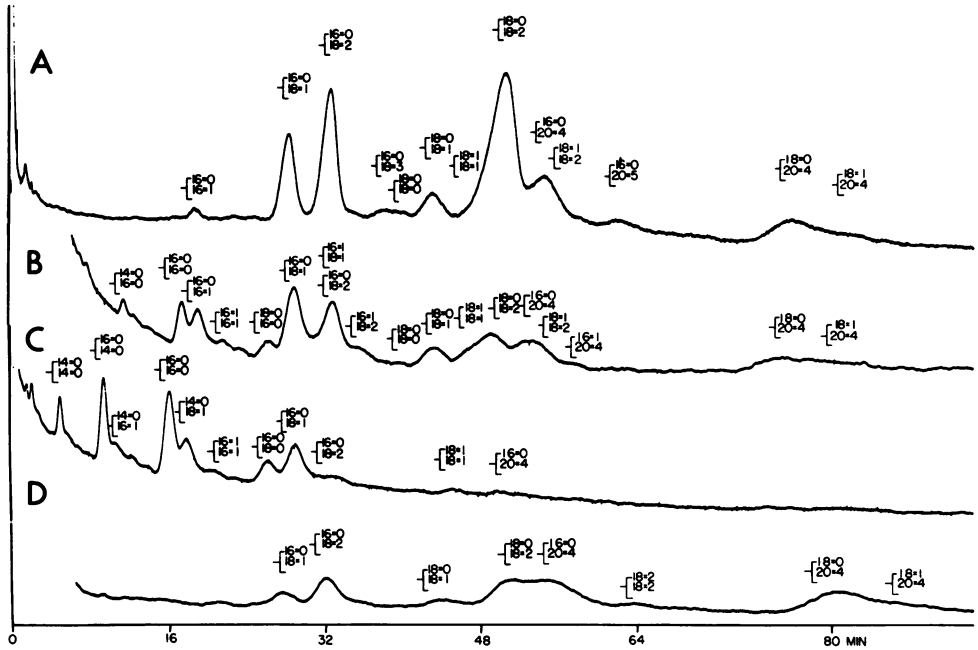

FIGURE 4. GLC patterns of diacylglycerols from intestinal mucosa of fasting and fat-fed rats (*15*): (A) sn-1,2-diacylglycerols of rat liver phosphatidylcholine (reference standards); (B) sn-1,2-diacylglycerols from rats fed free fatty acids; (C) sn-1,2- and sn-2,3-diacylglycerols from rats fed triacylglycerols; (D) sn-1,2-diacylglycerols from fasted rats. GLC conditions: 3% Silar 5CP (a cyanopropylphenylsiloxane polymer) on Gas Chrom Q (100-120 mesh) packed into a glass U-tube (180 cm × 0.3 cm) and operated at 265°C (isothermally) using a F and M Biomedical Gas Chromatograph equipped with a flame ionization detector. Sample: 1 μl of 1% solution of trimethylsilyl ethers of diacylglycerols in silylation mixture.

triacylglycerols. Provided sufficient choline were available the sn-1,2-diacylglycerols, arising either via the phosphatidic acid or the monoacylglycerol pathway would give rise to triacylglycerols and phosphatidylcholines in proportion to the activity of the slowest enzyme in each pathway. The possibility of a feed-back regulation of phospholipid synthesis should also be considered because phosphatidylcholine does not normally accumulate in the cell unless membrane biosynthesis has been specifically stimulated (*28*). If both sn-1,2-and sn-2,3-diacylglycerols were generated from the 2-monoacylglycerols in equal amounts, the possibility for phospholipid synthesis would be reduced by one half.

There is evidence, however, that diacylglycerols synthesized via the 2-monoacylglycerol pathway, even when of the sn-1,2-configuration, are not incorporated into phosphatidylcholine while the diacylglycerols synthesized via the phosphatidic acid pathway are precursors of phosphatidylcholine (*17, 29*). In these experiments the diacylglycerols resulting from the phosphatidic acid pathway were bound to microsomes, while the diacylglycerols of the monoacylglycerol pathway were generated from added 2-monoacylglycerols. Controls containing added sn-1,2-diacylglycerols were not tested. It was suggested that the diacylglycerols arising from the monoacylglycerol pathway are not available for phosphatidylcholine synthesis because of physical segregation. It is not known to what extent this conclusion may have been influenced by any difficulty of substrate accessibility in such *in vitro* experiments. Nevertheless, a segregation of diacylglycerol pools or at least the acyl CoA pools is also suggested by analysis of the molecular species of diacylglycerols recovered from the intestinal mucosa during active fat absorption (*15, 25*). It has been demonstrated (*15*) that an sn-1,2-diacylglycerol pool exists which is characterized by high proportions of 18:2 and 20:4 acids in the sn-2-position and which does not participate in triacylglycerol formation, although it could have contributed to the biosynthesis of phosphatidylcholine. The diacylglycerol pool was closely similar to that identified in fasting intestinal mucosa. Figure 4 compares the composition of this pool to that derived from feeding of free fatty acids alone and to that arising from the combined operation of the monoacylglycerol and of the phosphatidic acid pathway. During triacylglycerol feeding both sn-1,2-

and sn-2,3-diacylglycerols were recovered in significant amounts from the intestinal mucosa. The composition of the sn-2,3-diacylglycerols corresponded to that with the exogenous fatty acids, while the sn-1,2-diacylglycerols clearly contained both exogenous and endogenous fatty acids (*15*). In addition to these sn-1,2- and sn-2,3-diacylglycerols containing the original fatty acids in the sn-2-position there were sn-1,2-diacylglycerols, labeled from free fatty acids, which did not contain the acid present in the 2-monoacylglycerol supplied in the diet, and which therefore must have originated via the phosphatidic acid pathway. These results may also be explained by assuming that the fatty acyl CoA pool was heterogeneous. There was no evidence of a heterogeneity of the triacylglycerols arising from the different diacylglycerol pools (*25*). *In vivo* studies have shown that dietary fatty acids are readily incorporated into mucosal phospholipids and triacylglycerols but that a complete equilibration is not obtained (*30*). It is possible that the latter differences arise from acyl exchanges on the phospholipid molecules as well as from a dilution of the newly synthesized phosphatidylcholine molecules by molecules arising from reacylation of lysophosphatidylcholine (*31*). It has been estimated that the *in vivo* contribution of the phosphatidic acid pathway during absorption of long chain fatty esters of glycerol is approximately 20% and that it may exceed this level when an excess of free fatty acid arises due to loss of short chain monoacylglycerols (*25*). In other instances the contribution of the phosphatidic acid pathway may be minimal due to an excess of monoacylglycerol because of a loss of short chain fatty acids to the portal route. The endogenous diacylglycerol pool which apparently did not participate in triacylglycerol synthesis was estimated at 0.5 ± 0.3 mg/g tissue (*15*).

Monoacylglycerol Inhibition of Phosphatidic Acid Pathway

The high activity of the phosphatidic acid pathway during monoacylglycerol absorption and triacylglycerol biosynthesis via the monoacylglycerol pathway is unexpected in view of the claim that monoacylglycerols and monoalkylglycerol ethers inhibit the phosphatidic acid pathway in intestinal microsomes and adipocytes (*32, 34*). A direct inhibition by monoacylglycerols of the acylation of glycerol phosphate and not a competition for available acyl CoA was shown by the demonstration that sn-3-alkyl analog of the sn-3-monoacylglycerol inhibits the acylation of the glycerol phosphate without becoming esterified itself (*33*). Polheim et al. (*34*) have claimed that phosphatidic acid biosynthesis becomes inhibited by 2-monoacylglycerols under conditions where their hydrolysis is prevented, and that this effect has a metabolic significance. Although the reacylation of 2-monoacylglycerols *in vivo* (*15*) and in everted sacs *in vitro* (*20*) takes place under conditions of extremely limited hydrolysis, no evidence has been obtained for an inhibition of the phosphatidic acid pathway. Because of the rapid reacylation of the 2-monoacylglycerols, it is extremely unlikely that concentrations of 200-500 nmole of monoacylglycerol per 100 mg of wet tissue would ever be reached under normal conditions. Yet these concentrations of the monoalkyl glycerols were necessary to reduce the activity of the phosphatidic acid pathway by 50 to 80% (*34*). A complete shutdown of the phosphatidic acid pathway, however, was not obtained even at much higher concentrations of the monoacyl or monoalkylglycerols. It is therefore possible that this effect represents merely a detergent action of the surface active materials upon membrane bound enzymes. A complete shutdown of the phosphatidic acid biosynthesis may not be compatible with a normal resynthesis of the cell membranes because some of the component phospholipids require phosphatidic acid as the precursor and all require sn-1,2-diacylglycerols from the phosphatidic acid pathway, especially if the sn-1,2-diacylglycerols generated via the monoacylglycerol pathway cannot be utilized for this purpose. As shown below, phosphatidylcholine is an essential component of the chylomicron structure and its requirements can be met only in part by the reacylation of lysophosphatidylcholine, the rest must be formed *de novo* (*35*). It is, therefore, unlikely that monoacylglycerols exert significant inhibitory effect on the activity of the phosphatidic acid pathway *in vivo*. Studies *in vivo* and in everted sacs *in vitro* have given evidence for an increased biosynthesis of both triacylglycerols and phosphatidylcholine via the phosphatidic acid pathway during increased activity of the 2-monoacylglycerol pathway (*36*).

Role of Phosphatidylcholine in Fat Absorption

It has been shown that the resynthesis of triacylglycerols and the formation of chylomicrons is accompanied by an incorporation of small but definite amounts of phosphatidylcholine in these lipid particles. It has been calculated that the amount of the phosphatidylcholine present in the chylomicrons secreted in lymph is equivalent to a monolayer covering the surface of the spherical chylomicron particle containing all the triacylglycerols in the central

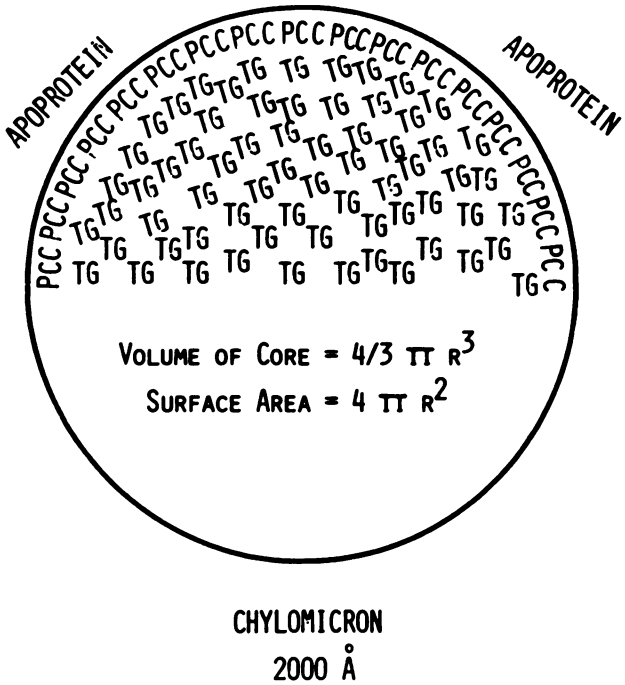

FIGURE 5. Simplified schematic of structure of chylomicra indicating presence of polar lipids, phosphatidylcholine (PC) and cholesterol (C), in surface monolayer and neutral lipids, triacylglycerols (TG), in interior. The apoproteins are associated with surface of particle. The amount of phosphatidylcholine in surface monolayer can be calculated from knowledge of crosssectional area of phosphatidylcholine and cholesterol, and from volume of triacylglycerol molecule (*13*).

core (*13, 14*). Figure 5 shows a schematic representation of such a particle for the rat. Although this structure is now generally accepted as a good approximation of the organization of lipids in all chylomicrons, there remains some reluctance to accept the absolute requirement of each of the components in the formation and secretion of chylomicrons.

Recent studies, however, indicate that a lack of choline, lysophophatidylcholine, or phosphatidylcholine may impair the clearance of fat from the intestinal mucosa (*37, 38*) or from isolated mucosal cells (*39*). These observations are in accord with the original claim of Frazer (*40*), who had noted that a dietary supplementation with choline resulted in a more rapid clearance of fat from the intestinal mucosa of rats receiving large amounts of corn oil in the diet. Using smaller amounts of fat, Tasker and Hartroft (*41*), however, were unable to confirm this. O'Doherty et al. (*37*) recognized that the source of the poor reproducibility of this observation could have been the availability of phosphatidylcholine in the bile, which was not controlled. This possibility was supported by the work of Morgan (*42*), who had failed to obtain a fatty gut in bile fistula rats receiving fat emulsions containing phosphatidylcholine in the form of egg lecithin. Using a 24 hr bile fistula rat and administering a heavy fatty meal containing monoacylglycerols, free fatty acids and bile salts in micellar proportions but in large amounts (> 800 mg) via a stomach tube, it was possible to induce a fatty gut reproducibly. The fatty gut was readily cleared by the inclusion of choline, lysophosphatidylcholine, or phosphatidylcholine in the meal. Furthermore, the appearance of the fatty gut was associated with decreased amounts of radioactive fatty acids in the liver and adipose tissue of these animals, all of these effects being abolished by choline and its phosphatides and not by other phospholipids included in the meal. These observations were further confirmed in isolated villus cells of rat intestinal mucosa with essentially identical results (*39, 43*). These findings in the bile fistula rats have now been confirmed by Clark (*44*) and by Tso et al. (*38*), who analyzed the lymph. A previous attempt with much smaller amounts of dietary fat had failed to give evidence of impairment (*45*). Obviously the intestinal mucosa possesses considerable resources to meet modest requirements of choline and phosphatidylcholine for chylomicron formation, e.g., blood, bile, food and possibly autodigestion of shed cells. When these supplies are either eliminated or the demand exceeds the supply as in case of high doses of dietary fat, a fatty gut persists until the choline or phosphatidylcholine requirement can be satisfied. These experiments clearly suggest that the intestinal mucosa specifically uses and requires phosphatidylcholine for both synthesis and secretion of chylomicrons. The absorption and clearance of small amounts of triacylglycerols does not require necessarily the addition of choline or lysophosphatidylcholine for this purpose as this requirement can be met from endogenous sources (*45-47*). Furthermore, the size of chylomicrons can be increased within limits to "get by" when packaging material is in short supply as also suggested for the sparing of the apopeptides during inhibition of protein biosynthesis (*5, 11*).

The need for phosphatidylcholine for the effective clearance of high loads of dietary fat may also be implied from the electron microscopic studies of Friedman and Cardell (*48*). These investigators showed that during puromycin poisoning there was a dramatic reduction of intracellular membrane material within 1 hr of treatment. Since phosphatidylcholine is a major component of cell membranes, a shortage of choline or lysophosphatidylcholine could become critical especially in the rat, which has

very limited capability of generating choline by methylation of phosphatidylethanolamine (*49*).

There have been several recent reports (*46, 50*) proclaiming no special requirement for phosphatidylcholine or choline for fat absorption in the rat. These studies have been based on experiments conducted during infusion of dilute micellar solutions or dilute emulsions of triacylglycerols, which would not be sufficient to bring about any significant mass accumulation in the absorptive cell and thus taxing its ability to package the triacylgylcerols and secrete them as chylomicrons. Furthermore, the lack of requirement of choline or its derivatives was judged on the basis of various ratios of radioactive triacylglycerol and phosphatidylcholine in the lymph, which would not have been expected to change regardless of whether or not choline had any effect on the secretion of chylomicrons. In any event, in these instances the minor amounts of triacylglycerol mass could be packaged without requiring the use of luminal choline, possibly by increasing the chylomicron size. The infusion experiments, however, may not be representative of the physiological state because the continued washing of the intestinal surface with a micellar solution of bile salts, fatty acids and monoacylglycerols may adversely affect the process of fat absorption. It is possible that such perfusion experiments lead to serious erosion of the mucosal surface especially if initiated up to 24 hr prior to the actual experiment.

It is possible that the definition of the requirements of the metabolic components for effective fat absorption can be carried even further. Thus, Van den Berg and Hulsman (*51*) have claimed that fat absorption may be delayed by a lack of dietary carbohydrates necessary for the synthesis of the appropriate molecular species of phosphatidylcholine. Although the chylomicron phosphatidylcholine has a fatty acid composition clearly different from that of the diacylglycerols (*30*), detailed studies have not been carried out of the corresponding sn-1,2-diacylglycerol moieties of the triacylglycerols over the course of the fat absorption. Clark et al. (*52*) have provided a partial support for this suggestion by demonstrating that essential fatty acid deficiency affects the synthesis and/or release of chylomicron lipid from the intestine. The possibility of impaired biosynthesis of cell membranes in essential fatty acid deficiency must also be considered.

The specificity for the requirement of phosphatidylcholine for enterocyte absorption of dietary fat is also seen from the demonstration that the enantiomer of natural lysophosphatidylcholine would not support chylomicron synthesis and secretion in the rat (*53*).

Role of Apopetides in Fat Absorption

Some controversy has also arisen concerning the role played by apoproteins in chylomicron formation and secretion. Redgrave and Zilversmit (*54*) have challenged the need for protein and especially β-apoprotein synthesis for chylomicron release originally claimed by Sabesin and Isselbacher (*55*) and have proposed that the effect of puromycin and other inhibitors on protein biosynthesis could have been due to interference with a variety of transport processes including the time of stomach emptying, and not necessarily involving a lack of packaging material. O'Doherty et al. (*39, 56*) have since shown that mucosal villus cells prepared from rats pretreated with puromycin fail to release chylomicrons following isolation, while control rats release them nearly instantaneously. Obviously the block of release must be located within the intestinal villus cell. Since puromycin added to the cells following isolation from untreated animals failed to inhibit either triacylglycerol synthesis or release to a comparable extent, it was obvious that a long-term effect, such as protein synthesis, was involved, rather than a simple disorganization of the subcellular structure (*57*). Glickman et al. (*58*) have shown that inhibition of protein synthesis reduces fat absorption and produces a marked and sustained increase in chylomicron size, which can be rationalized as an attempt to package lipid more efficiently with limited supplies of apoprotein. Subsequently Glickman and Kirsch (*59*), using gel electrophoresis, showed that in inhibited rats there was no significant difference in the apoprotein derived from chylomicrons of different sizes, but in animals treated with acetoxycycloheximide the proportion of a major apoprotein, which appeared to be a high density lipoprotein, was greatly reduced. Thus the balance of evidence supports the view that lipoprotein synthesis in the enterocyte has a marked influence on the absorption and transport of long-chain triacylglycerols.

Expansion of Lipid Phosphorus Pool during Fat Absorption

Assuming that phosphatidylcholine constitutes an essential component of the chylomicron structure being present in a definite ratio (3-4% of total lipid) to the triacylglycerols (*13, 14*), it is reasonable to expect that chylomicron synthesis and clearance would be accompanied by a loss of phosphatidylcholine from the mucosal cell, which would have to be made up by synthesis. Since some of the requirement would be met by acylation of luminal lysophosphatidylcholine

Table 1. Pool size of phospholipids and triacylglycerols of intestinal mucosa of fasted and fed rats[a]

Samples	Phospholipids, (PL), mg/g protein[b]	Triacylglycerols (TG), mg/g protein	(PL/TG) × 100
Fasted			
Scrapings	238 ± 24	26.4 ± 3	
Crypt cells	196 ± 20	24.1 ± 3	
Villus cells	232 ± 23	24.1 ± 3	
Fat-fed			
Scrapings	334 ± 30	1263 ± 120	
Crypt cells	194 ± 20	556 ± 50	
Villus cells	324 ± 30	1086 ± 100	
Increments			
Scrapings	95.3	1236	7.7
Crypt cells	− 1.8	532	
Villus cells	91.7	1062	8.6

[a]Male rats weighing 150-200 g received 1.5 ml of corn oil plus 50 mg egg lecithin by stomach tube and were sacrificed 2.5 hr later. The total phospholipid and triacylglycerol pools were compared to those measured in a control group having access to water only. Mucosal scrapings, and crypt and villus cells were prepared by differential scraping digestion of intestinal mucosa with hyaluronidase (*61*).

[b]Means ± S.D. for three determinations.

(*60*), the synthesis would only be partially reflected in an increased incorporation of radioactive phosphate (involving CDP choline). Provided sufficient fat remained in the intestinal mucosa during the synthesis of the chylomicrons there should be an expected expansion of the phosphatidylcholine pool. An expansion of the membrane phospholipid pool would also be expected if increased membrane synthesis and turnover was involved as well (*48*). This increase in the phospholipid pool could be accompanied either by an increased or decreased relative specific activity of the lipid phosphorus depending on the time of introduction of the label and the time course of fat absorption. Recent work from our laboratory has tended to support this hypothesis (*61*).

Table 1 compares the pool sizes of the total phospholipids and of triacylglycerols in the mucosal scrapings, and in crypt and villus cells from starved and fed rats. It may be seen that the accumulation of an excess of 1061.9 mg/g protein of triacylglycerol in the villus cells is accompanied by a parallel accumulation of 91.7 mg phospholipid/g protein, which corresponds to about 8.6% of the triacylglycerol. A comparable accumulation of phospholipid is seen in the scrapings (7.7% of the net triglyceride accumulation). In contrast the much lower accumulation of triacylglycerols in the crypt cells is accompanied by no discernible accumulation of phospholipid. This increase in the phospholipid pool of the villus cells and of the mucosal scrapings is about twice that anticipated for phosphatidylcholine on the basis of the increase in the triacylglycerol content. Presumably it also represents other phospholipids (up to 30%) as well as an increase in the amount of membrane phospholipid during fat absorption as already noted in connection with the puromycin effect seen in the electron microscope (*48*).

Table 2 compares the relative specific activities of the total phospholipids of the scrapings and of crypt and villus cells of rat intestinal mucosa following a 30-min intravenous infusion of inorganic phosphate-[^{32}P]. It is seen that the relative specific radioactivity of the phospholipids is significantly higher in both scrapings and in villus cells from the fat-fed animals, although the overall radioactivity is low. These changes in the relative specific activity of the lipid phosphate represent 20-30% higher phospholipid synthesis in the fat absorbing cells when compared to starving cells.

The results were reassessed in a larger number of rats 9-11 hr after receiving the inorganic phosphate-[^{32}P] but having a continuous access to food (*61*). In these series of experiments very little triacylglycerol was accumulated, and there was little increase in the phospholipid pool size. However, the relative increase in the phospholipid pool was reasonable in view of the small amount of triacylglycerol accumulated. Under these conditions, the apparent excess of the phospholipid must be attributed to the increase in the membrane phospholipid of the fat absorbing cells when compared to the starving cells. Furthermore, the villus cells from fed rats had lower relative specific activity of the lipid phosphorus pool when compared to those from fasting rats, while the crypt cells had about the same relative specific activity of the lipid phosphorus pool after fat feeding. Surprisingly, the relative specific activity of the mucosal scrapings after fat feeding was higher than the average of that of the crypt and villus cells. Since there was very little triacylglycerol accumulated by the cells or the scrapings in these experiments it was not possible to definitely relate the changes in the rela-

Table 2. Relative specific activities of total phospholipids of intestinal mucosa of fasted and fed rats 30 min after injection of inorganic phosphate-[^{32}P][a]

Treatment	Relative specific activities × 10^{3}[b]		
	Scrapings	Crypt cells	Villus cells
Fasted	28 ± 2	75 ± 4	64 ± 3
Fat-fed	63 ± 3	110 ± 6	96 ± 5

[a]Animals as in Table 1. Intravenous injection of ^{32}P (0.4 mCi/animal) was made 30 min prior to sacrifice.

[b]Mean ± S.D. for three determinations. Relative specific activities = (dpm/μg lipid P)/(dpm/μg nonlipid P).

tive specific activities of the lipid phosphorus pools to the accumulation of the triacylglycerols in the form of any chylomicrons. Nevertheless, the lower relative specific activity of the villus cells may represent an increased loss of phosphatidylcholine from the mucosa during the clearance of the triacylglycerols, as well as an increased turnover of the membrane phospholipids.

Previous studies, however, have failed to detect any difference in the phospholipid content or turnover between mucosal scrapings of starved and fat-fed animals (*62*), and it has been concluded that fat absorption does not stimulate the rate of phospholipid turnover. It must be pointed out that the latter investigators were looking for an increase in phospholipid turnover of a much larger magnitude which would be sufficient to account for the formation of glycerophospholipids as intermediates in fat absorption (*63*). Also, these workers did not use isolated cells from the intestine. Perhaps the scrapings were too crude to detect the relatively small changes.

Summary and Conclusions

A review of past and present studies on the mechanism of resynthesis and clearance of dietary fat from the rat intestinal mucosa allows the following conclusions.

Under *in vivo* conditions dietary fat is absorbed largely via the 2-monoacylglycerol pathway, with the phosphatidic acid pathway contributing a minimum of 20% of the total resynthesis.

In vivo studies have failed to reveal any inhibition of the phosphatidic acid pathway by 2-monoacylglycerols, in contrast to *in vitro* studies with intestinal microsomes and slices.

The 2-monoacylglycerols *in vivo* appear to be reacylated about equally via the sn-1,2- and sn-2,3-diacylglycerol enantiomers, although in cell free systems, the formation of the sn-1,2-diacylglycerol enatiomer is markedly favored.

The intestinal mucosa contains several pools of diacylglycerols which appear to be unequally utilized in triacylglycerol and glycerophospholipid biosynthesis. It is not known whether or not this segregation is based on a physical separation and differences in fatty acid composition or also on differences in stereochemical configuration.

There is a specific requirement for phosphatidylcholine biosynthesis in support of large-scale chylomicron formation and secretion, although smaller amounts of chylomicrons may be secreted by increasing the particle size without expansion of the phospholipid pool. Likewise, there is also a requirement for apopeptide synthesis for the same purpose. Shortage of either or both leads to impaired chylomicron formation and secretion.

The requirement for phosphatidylcholine biosynthesis during fat absorption is supported by the recent demonstration of an expansion of the mucosal lipid phosphorus pool and appropriate changes in its relative specific activity.

Mucosal absorption of dietary fat therefore appears to be a concerted metabolic event involving the entire villus cell rather than a shunt characterized by limited metabolic commitment of the cellular machinery.

As a result the involvement of fat absorption and metabolism in the interaction between environmental agents and the alimentary tract must be expected to be complex. To date, very little of this interaction has been documented.

The studies by the senior author and his collaborators were supported by the Medical Research Council of Canada and the Ontario Heart Foundation, Toronto, Canada.

REFERENCES

1. Sieber, S. M., Cohn, V. H., and Wynn, W. T. The entry of foreign compounds into the thoracic duct lymph of the rat. Xenobiotica 4: 265 (1974).
2. Schedl, H. P. Evnironmental factors and the development of disease and injury in the alimentary tract. Environ. Health Perspect. 20: 39 (1977).
3. Borgstrom, B. Fat digestion and absorption. Biomembranes 4B: 555 (1974).
4. Brindley, D. N. The intracellular phase of fat absorption. Biomembranes 4B: 621 (1974).
5. Ockner, R. K., and Isselbacher, K. J. Recent concepts of intestinal fat absorption. Rev. Physiol. Biochem. Pharmacol. 71: 107 (1974).
6. Gangl, A., and Ockner, R. K. Intestinal metabolism of lipids and lipoproteins. Gastroenterology 68: 167 (1975).
7. Johnston, J. M. Gastrointestinal tissue. In: Lipid Metabolism in Mammals, Vol. 1, F. Snyder, Ed., Plenum Press, New York, 1977, p. 151.
8. Dietschy, J. M. General principles governing movement of lipids across biological membranes. In: Disturbances in Lipid and Lipoprotein Metabolism. J. M. Dietschy, A. M. Gotto, Jr., and J. A. Ontko, Eds., American Physiological Society, Bethesda, Md., 1978, p. 1.
9. Thompson, A. B. R. Intestinal absorption of lipids: influence of the unstirred water layer and bile acid micelle. In: Disturbances in Lipid and Lipoprotein Metabolism, J. M. Dietschy, A. M. Gotto, Jr., and J. A. Ontko, Eds., American Physiological Society, Bethesda, Md., 1978, p. 29.
10. Johnston, J. M. Esterification reactions in the intestinal mucosa and lipid absorption. In: Disturbances in Lipid and Lipoprotein Metabolism. J. M. Dietschy, A. M. Gotto, Jr., and J. A. Ontko, Eds., American Physiological Society, Bethesda, Md., 1978, p. 57.
11. Zilversmit, D. B. Assembly of chylomicrons in the intestinal cell. In: Disturbances in Lipid and Lipoprotein Metabolism. J. M. Dietschy, A. M. Gotto, Jr., and J. A. Ontko, Eds., American Physiological Society, Bethesda, Md., 1978, p. 69.
12. Paris, R., and Clement, G. Biosynthesis of lysophosphatidic acid from ATP and l-monoolein by subcellular particles of

intestinal mucosa. Proc. Soc. Exptl. Biol. Med. 131: 363 (1969).
13. Huang, T. C. A comparative study of the structure of milk fat globule and chylomicrons. Ph.D. Thesis, Queen's University, Kingston, Ontario, Canada, 1965.
14. Zilversmit, D. B. The surface coat of chylomicrons. J. Lipid Res. 9: 180 (1968).
15. Breckenridge, W. C., Yeung, S. K. F., Kuksis, A., Myher, J. J., and Chan, M. Biosynthesis of diacylglycerols by rat intestinal mucosa *in vivo*. Can. J. Biochem. 54: 137 (1976).
16. Holub, B. J., and Kuksis, A. Metabolism of molecular species of diacylglycerophospholipids. Adv. Lipid Res. 16: 1 (1978).
17. Johnston, J. M., Paltauf, F., Schiller, C. M., and Schultz, L. D. The utilization of the alpha-glycerophosphate and monoglyceride pathways for phosphatidylcholine biosynthesis in the intestine. Biochim. Biophys. Acta 218: 124 (1970).
18. O'Doherty, P. J. A., and Kuksis, A. Microsomal synthesis of di- and triacylglycerols in rat liver and Ehrlich ascites. Can. J. Biochem. 52: 514 (1974).
19. Breckenridge, W. C., and Kuksis, A. Stereochemical course of diacylglycerol formation in rat intestine. Lipids 7: 256 (1972).
20. Breckenridge, W. C. and Kuksis, A. Diacylglycerol biosynthesis in everted sacs of rat intestinal mucosa. Can. J. Biochem. 53: 1170 (1975).
21. O'Doherty, P. J. A. and Kuksis, A. Glycerolipid biosynthesis in isolated rat intestinal epithelial cells. Can. J. Biochem. 53: 1010 (1975).
22. Akesson, B., Gronowitz, S., Herslof, B., and Ohlson, R. Absorption of synthetic stereochemically defined acylglycerols in the rat. Lipids 13: 338 (1978).
23. Akesson, B., Gronowitz, S., and Michelson, P. Digestion and absorption of trioleoyl-thioglycerol in the rat. Chem. Phys. Lipids 23: 93 (1979).
24. Breckenridge, W. C., and Kuksis, A. Triacylglycerol biosynthesis in everted sacs of rat intestinal mucosa. Can. J. Biochem. 53: 1184 (1975).
25. Breckenridge, W. C., Yeung, S. K. F. and Kuksis, A. Biosynthesis of triacylglycerols by rat intestinal mucosa *in vivo*. Can. J. Biochem. 54: 145 (1976).
26. O'Doherty, P. J. A., Kuksis, A., and Buchnea, D. Enantiomeric diacylglycerols as stereospecific probes in triacylglycerol synthesis *in vitro*. Can. J. Biochem. 50: 881 (1972).
27. Myher, J. J., and Kuksis, A. Stereospecific analysis of triacylglycerols via racemic phosphatidylcholines and phospholipase C. Can. J. Biochem. 57: 117 (1979).
28. Hwang, K. M., Yang, L. C., Carrico, C. K., Schultz, R. A., Schenkman, J. B., and Sartorelli, A. C. Production of membrane whorls in rat liver by some inhibitors of protein synthesis. J. Cell. Biol. 62: 20 (1974).
29. Johnston, J. M., Rao, G. A. and Lowe, P. A. The separation of the alpha-glycerophosphate and monglyceride pathways in the intestinal biosynthesis of triglyceride. Biochim. Biophys. Acta 137: 578 (1967).
30. Arvidson, G. A. E. and Nilsson, A. Formation of lymph chylomicron phosphatidylcholine in the rat during the absorption of safflower oil and triolein. Lipids 7: 344 (1972).
31. Parthasarathy, S., Subbaiah, P. V. and Ganguly, J. The mechanism of intestinal absorption of phosphatidylcholine in rats. Biochem. J. 140: 503 (1974).
32. Schultz, F. M., Wylie, M. B. and Johnston, J. M. The relationship between the monoglyceride and glycerol-3-phosphate pathways in adipose tissue. Biochem. Biophys. Res. Commun. 45: 246 (1971).
33. Paltauf, F., and Johnston, J. M. The metabolism *in vitro* of enantiomeric 1-0-alkylglycerols and 1,2- and 1,3-alkylacylglycerols in the intestinal mucosa. Biochim. Biophys. Acta 239: 47 (1971).
34. Polheim, D., David, J. S. K., Schultz, F. M., Wylie, M. B. and Johnston, J. M. Regulation of triglyceride biosynthesis in adipose and intestinal tissue. J. Lipid Res. 14: 415 (1973).
35. O'Doherty, P. J. A., Kakis, G., and Kuksis, A. Role of luminal lecithin in intestinal fat absorption. Lipids 8: 249 (1973).
36. Gurr, M. I., Brindley, D. N. and Hubscher, G. Metabolism of phospholipids. VIII. Biosynthesis of phosphatidylcholine in the intestinal mucosa. Biochim. Biophys. Acta 98: 486 (1965).
37. O'Doherty, P. J. A., Yousef, I. M. and Kuksis, A. Effect of phosphatidylcholine on triacylglycerol synthesis in rat intestinal mucosa. Can. J. Biochem. 52: 726 (1974).
38. Tso, P., Lam, J., and Simmonds, W. J. The importance of the lysophosphatidylcholine and choline moiety of bile phosphatidylcholine in lymphatic transport of fat. Biochim. Biophys. Acta 528: 364 (1978).
39. O'Doherty, P. J. A., Yousef, I. M. and Kuksis, A. Effect of puromycin on protein and glycerolipid biosynthesis in isolated mucosal cells. Arch. Biochem. Biophys. 156: 586 (1973).
40. Frazer, A. C. Effect of choline on the intestinal absorption of fat. Nature 157: 414 (1946).
41. Tasker, R. R. and Hartroft, W. S. Choline and the intestinal absorption of fat. Nature 164: 155 (1949).
42. Morgan, R. G. H. and Borgstrom, B. The mechanism of fat absorption in the bile fistula rat. Quart. J. Exptl. Physiol. 54: 228 (1969).
43. O'Doherty, P. J. A., Yousef, I. M., Kakis, G., and Kuksis, A. Protein and glycerolipid biosynthesis in isolated intestinal epithelial cells of normal and bile-fistula rats. Arch. Biochem. Biophys. 169: 252 (1975).
44. Clark, S. B. Chylomicron composition during duodenal triglyceride and lecithin infusion. Am. J. Physiol. (2) 235: E183 (1978).
45. Tso, P., and Simmonds, W. J. Importance of luminal lecithin in intestinal absorption and transport of lipid in the rat. Austral. J. Exp. Biol. Med. Sci. 55: 355 (1976).
46. Rodgers, J. B. Lipid absorption in bile fistual rats. Lack of a requirement for biliary lecithin. Biochim. Biophys. Acta 398: 92 (1975).
47. Tso, P., Balint, J. A., and Simmonds, W. J. Role of biliary lecithin in lymphatic transport of fat. Gastroenterology 73: 1362 (1977).
48. Freidman, H. I., and Cardell, R. R., Jr. Effects of puromycin on the structure of rat intestinal epithelial cells during fat absorption. J. Cell. Biol. 52: 15 (1972).
49. Bjornstad, P., and Bremer, J. *In vivo* studies pathways for the biosynthesis of lecithin in the rat. J. Lipid Res. 7: 38 (1966).
50. Mansbach, C. M., II. The origin of chylomicron phosphatidylcholine in the rat. J. Clin. Invest. 60: 411 (1977).
51. Van den Berg, J. W. O. and Hulsmann, W. C. Excessive triglyceride accumulation in jejunal mucosa during carbohydrate-poor feeding. In: Abstracts of the 7th Meeting, Federation of European Biochemical Societies, Vol. 7, Varna, Bulgaria, 1971, p. 210.
52. Clark, S. B., Ekkers, T. E., Singh, A., Balint, J. A., Holt, P. R., and Rodgers, J. B., Jr. Fat absorption in essential fatty acid deficiency: a model experimental approach to studies of the mechanism of fat malabsorption of unknown etiology. J. Lipid Res. 14: 581 (1973).
53. O'Doherty, P. J. A. The importance of the steric configuration of lysophosphatidylcholine in the lymphatic transport of fat. Lipids 14: 84 (1979).
54. Redgrave, T. G. and Zilversmit, D. B. Does puromycin block release of chylomicrons from the intestine? Am. J. Physiol. 217: 336 (1969).
55. Sabesin, S. M. and Isselbacher, K. J. Protein synthesis in-

hibition: mechanism for the production of impaired fat absorption. Science 147: 1149 (1965).
56. O'Doherty, P. J. A., Yousef, I. M., and Kuksis, A. Differential effect of puromycin on triglyceride and phospholipid biosynthesis in isolated mucosal cells. Fed. Proc. 31: 2739 (1972).
57. O'Doherty, P. J. A. and Kuksis, A. Effect of puromycin *in vitro* on protein and glycerolipid biosynthesis in isolated epithelial cells of rat intestine. Int. J. Biochem. 6: 435 (1975).
58. Glickman, R. M., and Kirsch, K. and Isselbacher, K. J. Fat absorption during the inhibition of protein synthesis. J. Clin. Invest. 51: 356 (1972).
59. Glickman, R. M., and Kirsch, K. Lymph chylomicron formation during the inhibition of protein synthesis. J. Clin. Invest. 52: 2910 (1973).
60. Scow, R. O., Stein, Y., and Stein, O. Incorporation of dietary lecithin and lysolecithin into lymph chylomicrons in the rat. J. Biol. Chem. 242: 4919 (1967).
61. Shaikh, N. A., Hoffman, A. G. D. and Kuksis, A. Comparative study of pool size and specific activity of lipid phosphorus in crypt and villus cells of intestinal mucosa of fed and starved rats. Proc. Can. Fed. Biol. Soc. 20: 72 (Abs. No. 287) (1977).
62. Zilversmit, D. B., Chaikoff, I. L. and Enteman, C. Are phospholipids obligatory participants in fat transport across intestinal wall? J. Biol. Chem. 172: 637 (1948).
63. Sinclair, R. G. The role of the phospholipid of the intestinal mucosa in fat absorption. With additional data on the phospholipids of the liver, and smooth and skeletal muscle. J. Biol. Chem. 82: 117 (1929).